QTY.	IN ASSEMBLY
1	ALONE

BILL OF MATERIAL

MARK	QTY	DESCRIPTION	LENGTH	WEIGHT	REMARKS
3B1	1	BEAM			
3B1	1	W8X48	19'-11 1/16"	956	A992
3a632	1	L5X3X1/4	8'-9 3/16"	58	A36
3a701	1	L2-1/2X2-1/2X1/4	5'-2 3/4"	21	A36
3a705	1	L2-1/2X2-1/2X1/4	5'-6 1/2"	22	A36
3a706	1	L2-1/2X2-1/2X1/4	5'-2 13/16"	21	A36
3a1228	1	L5X3X1/4	8'-9 3/16"	58	A36
3st72	14	PL1/2"X3 7/8"	0'-7 1/16"	4	A36
3SA11	1	> SUB-ASSEMBLY subassembly		126	A36
3SA12	1	> SUB-ASSEMBLY subassembly		80	A36
3SA13	1	> SUB-ASSEMBLY subassembly		80	A36
		TOTAL WEIGHT THIS DRAWING		1476	

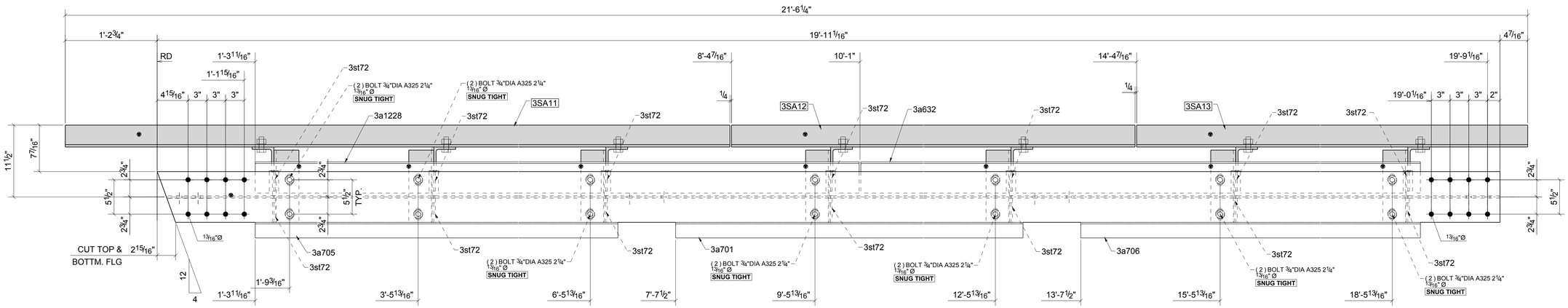

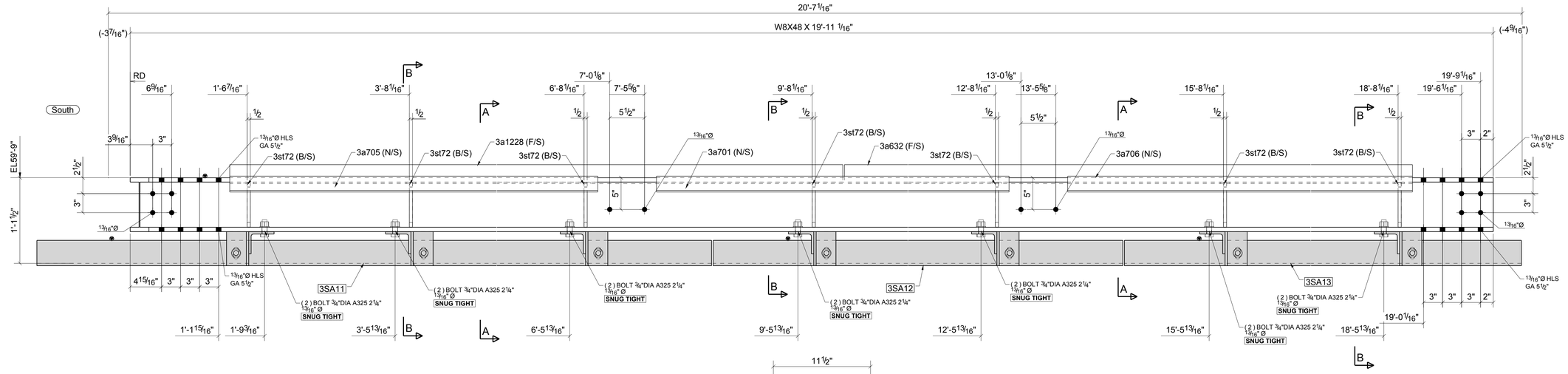

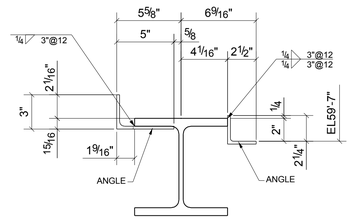

OTHER STRUCTURAL MEMBERS NOT SHOWN FOR CLARITY

A - A

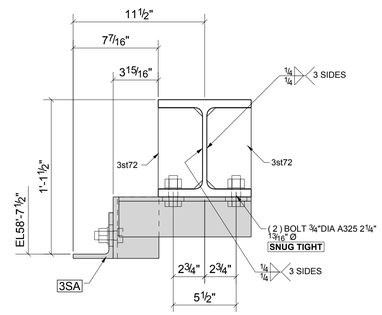

OTHER STRUCTURAL MEMBERS NOT SHOWN FOR CLARITY

B - B

ONE - BEAM - 3B1

Tekla Structures