QTY.	IN ASSEMBLY
1	ALONE

BILL OF MATERIAL

MARK	QTY	DESCRIPTION	LENGTH	WEIGHT	REMARKS
2B1	1	BEAM			
2B1	1	W12X120	28'-2"	3374	A992
2a6	1	L6X4X1/2	9'-9 1/16"	158	A36
2a7	1	L6X4X1/2	0'-11 15/16"	16	A36
2a14	1	L4X4X3/8	0'-8"	6	A36
2st1	2	PL1/2"X5 13/16"	0'-10 3/4"	9	A36
2SA1	4	> SUB-ASSEMBLY subassembly		25	A500-GR.B
2SA2	3	> SUB-ASSEMBLY subassembly		5	A500-GR.B
2SA3	1	> SUB-ASSEMBLY subassembly		9	A500-GR.B
2SA4	1	> SUB-ASSEMBLY subassembly		36	A500-GR.B
		TOTAL WEIGHT THIS DRAWING		3732	

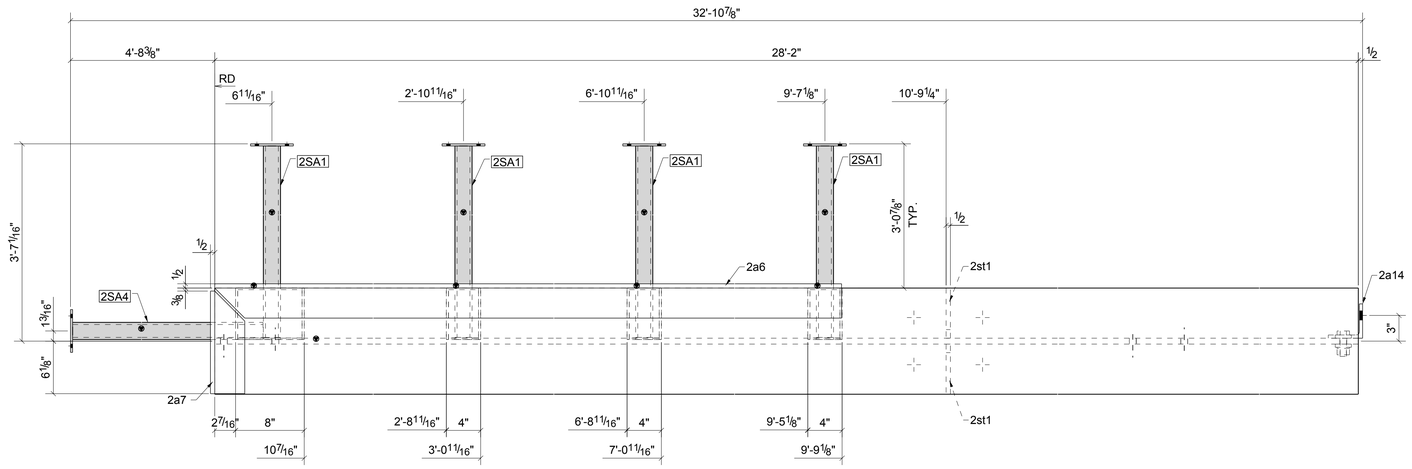

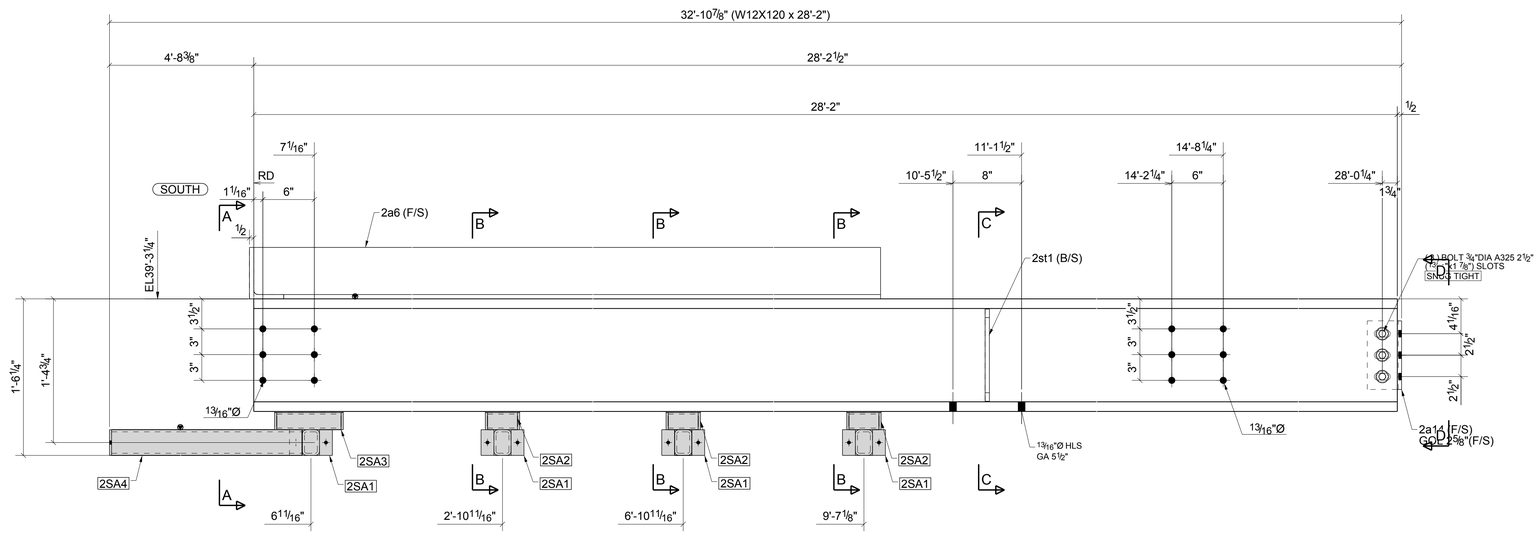

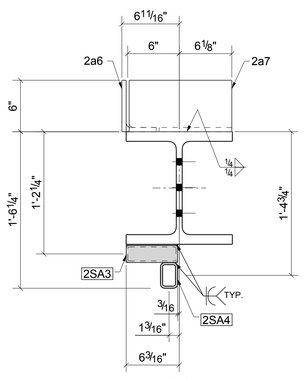

A - A

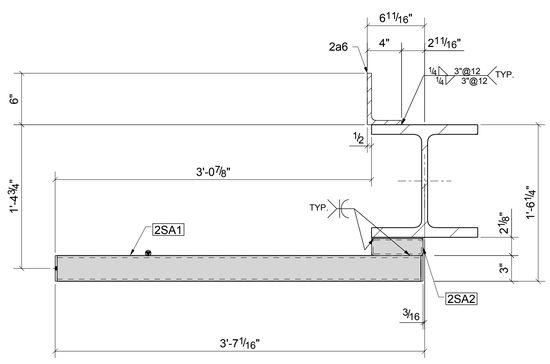

B - B

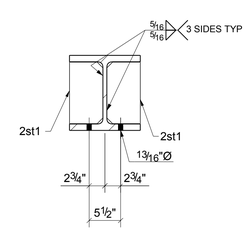

C - C

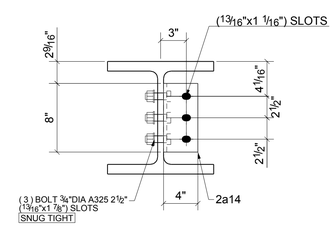

D - D

TOP,WEB & BOTTOM NAIL HOLES SEE NC FILE

ONE - BEAM - 2B1

Tekla Structures