QTY.	IN ASSEMBLY
1	ALONE

BILL OF MATERIAL

MARK	QTY	DESCRIPTION	LENGTH	WEIGHT	REMARKS
1C7	1	COLUMN			
1C7	1	HSS3-1/2X3-1/2X5/16	31'-8 1/4"	380	A500-GR.C
a3	2	L4X3-1/2X5/16	0'-8 1/2"	5	A36
bp3	1	PL1/2"X12"	1'-0"	20	A36
cp2	1	PL1/4"X3 1/2"	0'-3 1/2"	1	A36
sh35	2	PL5/8"X7"	0'-8 1/2"	11	A36
sh41	1	PL3/8"X4"	0'-5 1/2"	2	A36
st13	2	PL3/8"X2 1/2"	0'-3 1/2"	0	A36
1SA1	1	> PLATE_SA subassembly		12	A36
1SA2	1	> PLATE_SA subassembly		14	A36
2SA8	1	> PLATE_SA subassembly		12	A36
3SA7	1	> CHANNEL subassembly		43	A36
3SA11	1	> PLATE_SA subassembly		12	A36
		TOTAL WEIGHT THIS DRAWING		528	

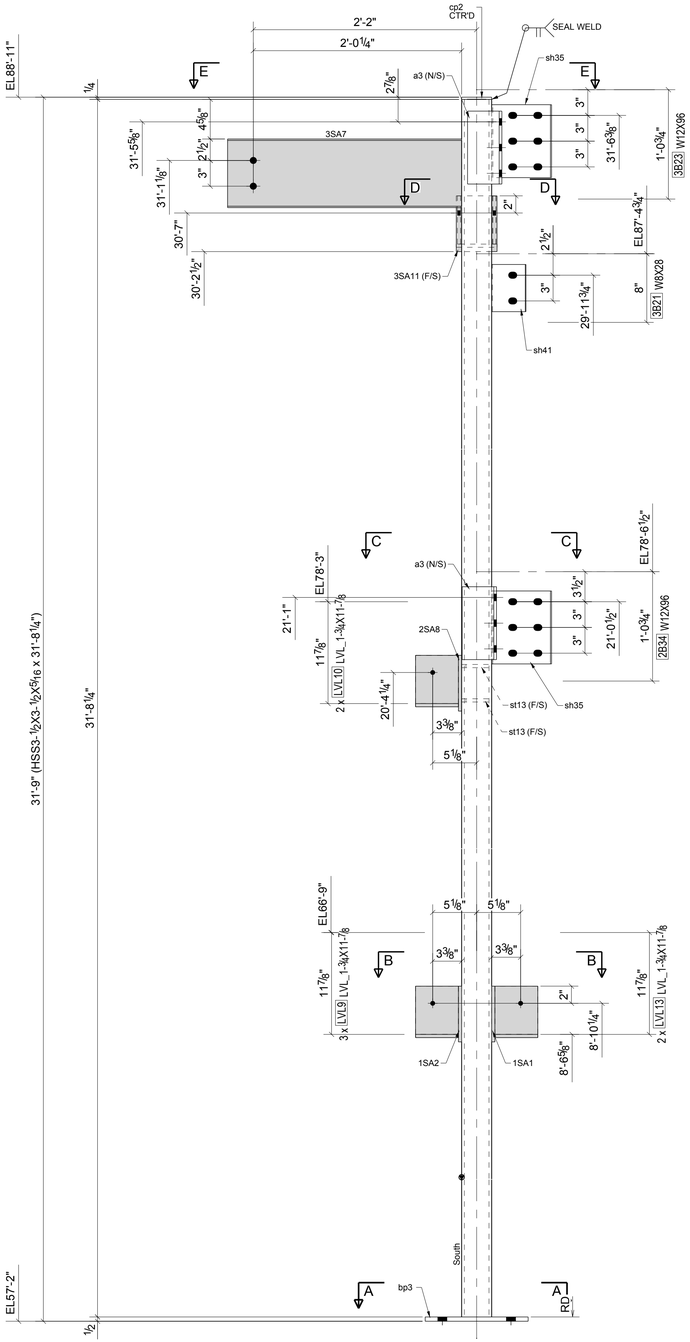

FACE - A

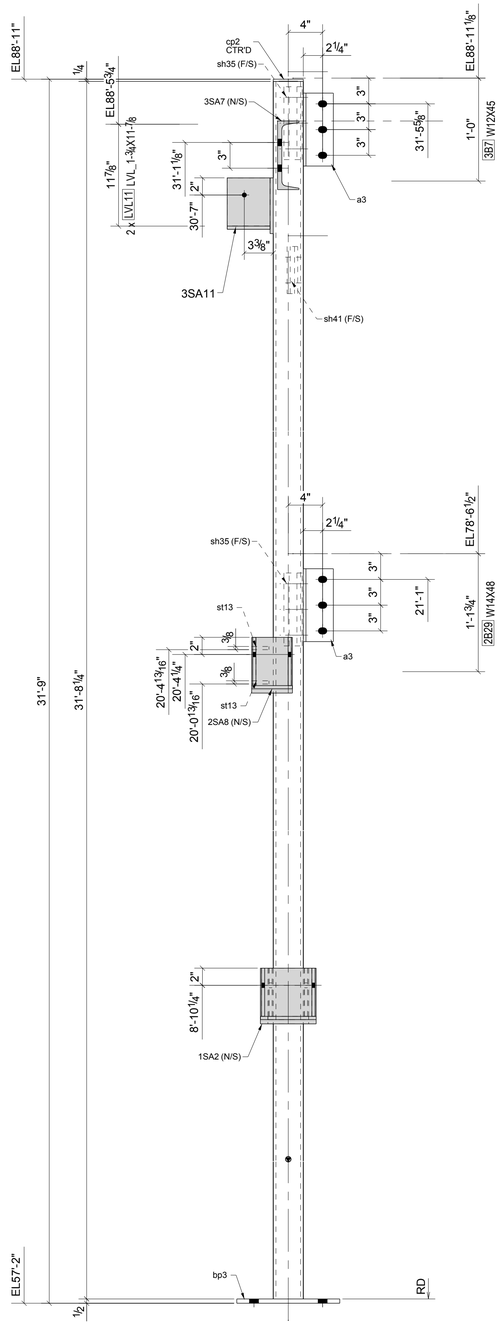

FACE - B

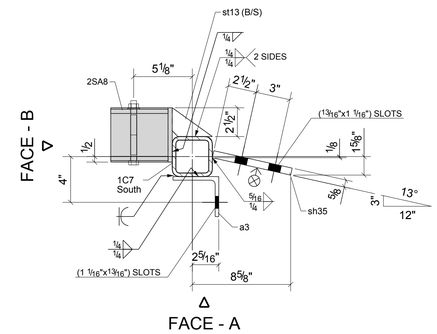

C - C

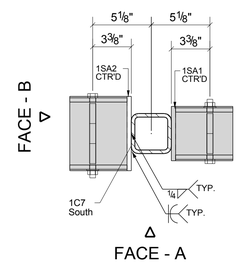

B - B

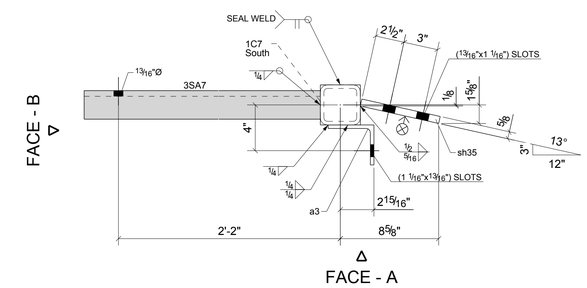

E - E

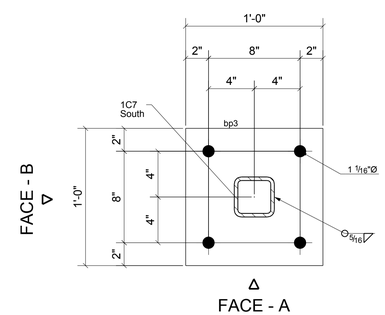

A - A

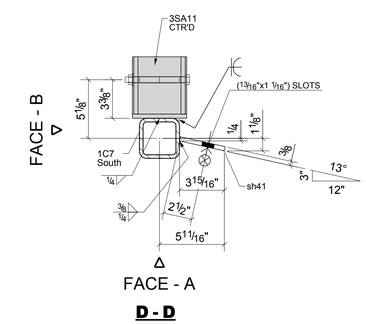

D - D

ONE - COLUMN - 1C7

Tekla Structures