GRID LOCATION	BOTTOM ELEVATION
15/F	82'-7"

BILL OF MATERIAL

MARK	QTY	DESCRIPTION	LENGTH	WEIGHT	REMARKS
1C15	1	COLUMN			SQ-2
1C15	1	W12X152	18'-5"	2802	A992
1bk6	2	PL1/4"X1"	0'-6 1/2"	1	A36
1bk7	4	PL1/4"X1"	0'-8"	2	A36
1bp4	1	PL1 1/2"X21"	1'-9"	188	A36
1sh4	1	PL1/2"X9 13/16"	1'-10 3/8"	29	A36
1sh48	1	PL3/8"X9 13/16"	0'-10 1/4"	10	A36
1sh57	1	PL3/8"X9 13/16"	0'-10 1/4"	10	A36
1sh67	1	PL3/8"X10 5/16"	1'-10 3/8"	23	A36
1st6	2	PL1/2"X5 13/16"	0'-10 15/16"	18	A36
1st25	4	PL3/8"X5 13/16"	0'-10 7/8"	26	A36
1st37	4	PL5/8"X5 13/16"	0'-10 15/16"	44	A36
1w249	1	W24X55	2'-5 9/16"	136	A992
	7	3/4"Ø A325N_TC BOLT	0'-2"	4	Workshop
		TOTAL WEIGHT THIS DRAWING		3293	

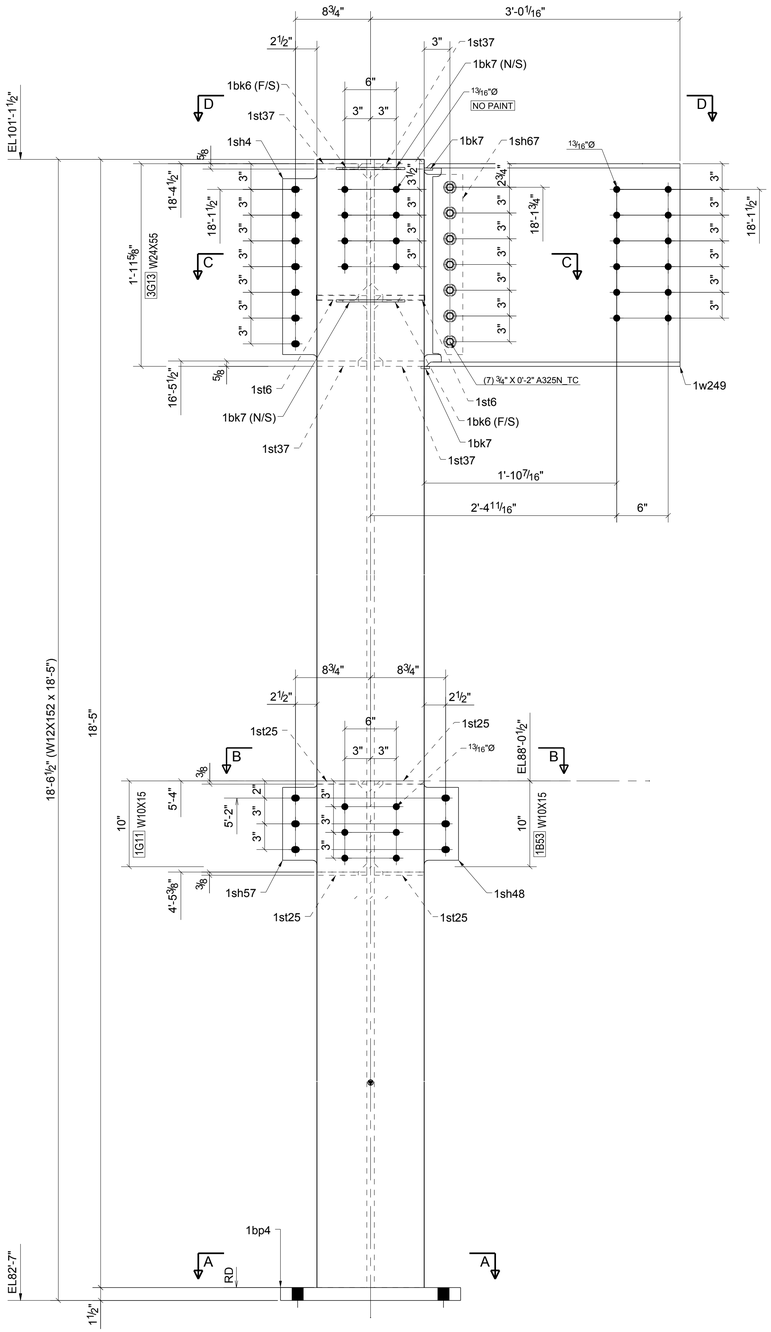

FACE - A

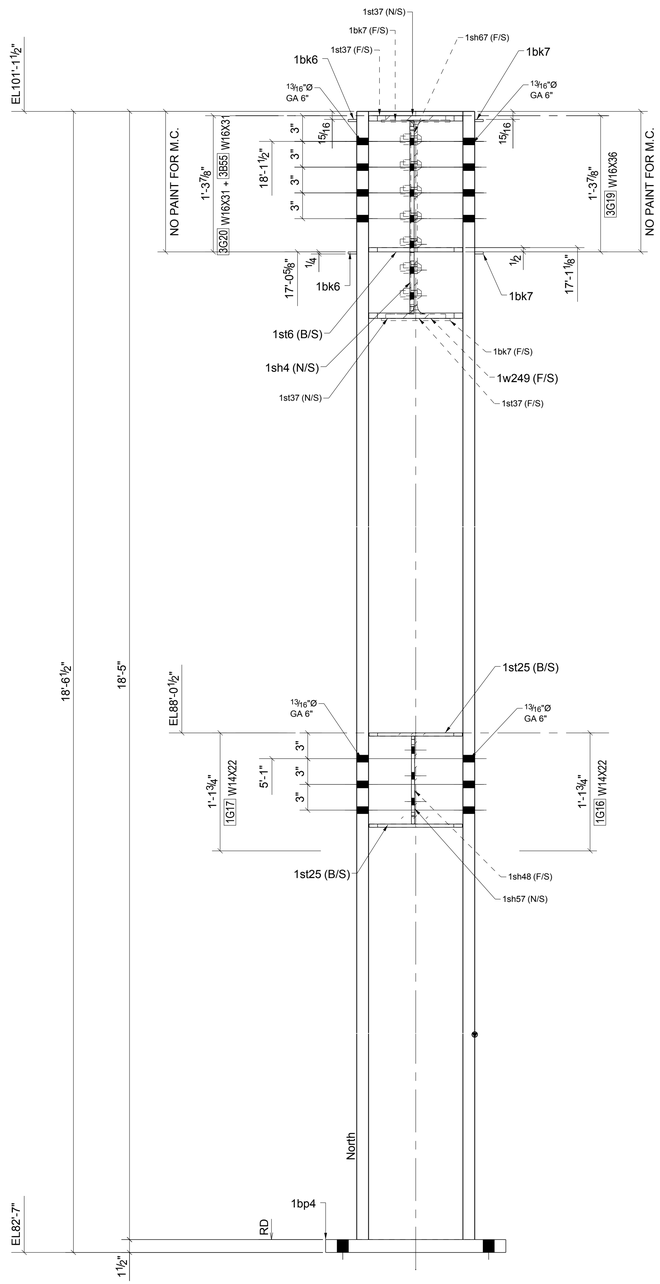

FACE - B

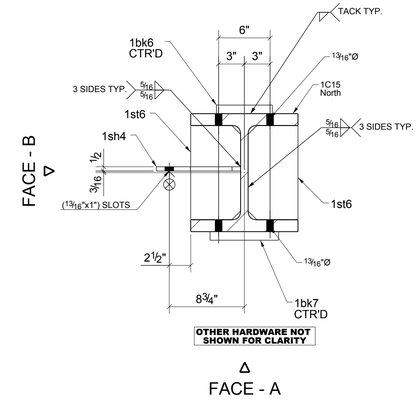

C - C

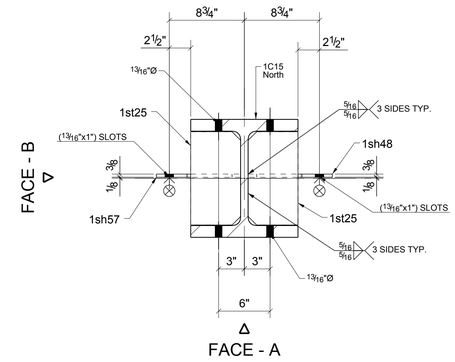

B - B

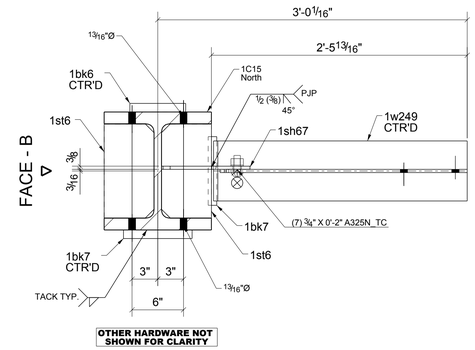

D - D

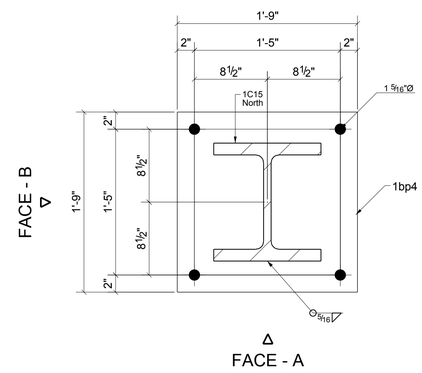

A - A

APPROVER:
PLEASE VERIFY ASSEMBLY
PRIMER AND FINISH.
SEE RFI-001 FOR REFERENCE

ONE - COLUMN - 1C15

Tekla Structures