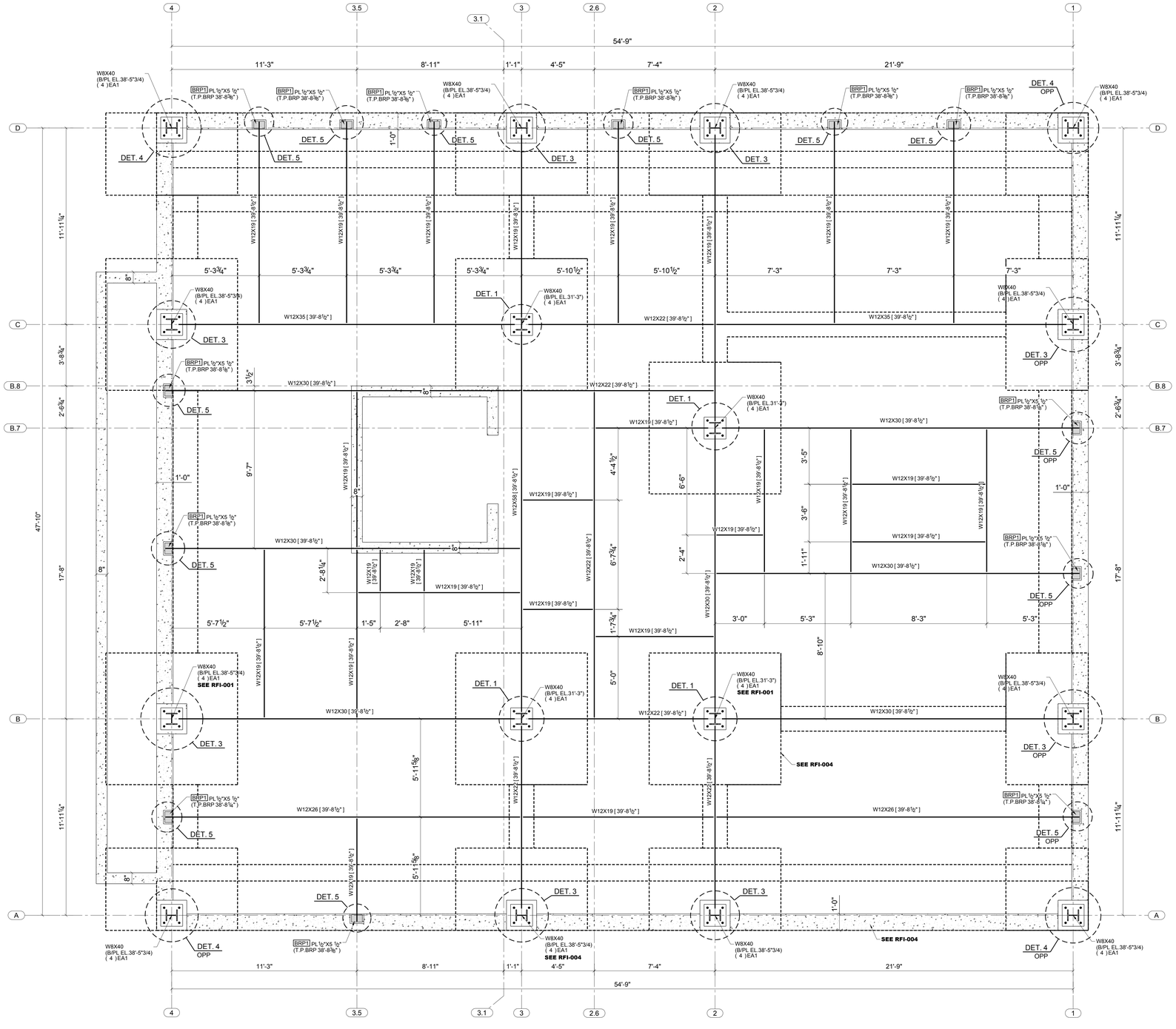

ANCHOR BOLT LAYOUT PLAN
SCALE: 1:32

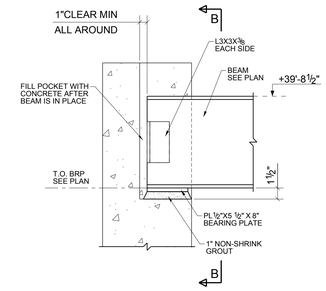

5 DETAIL
SCALE: 1:8

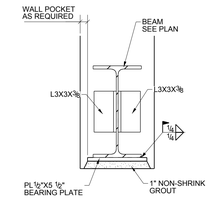

B SECTION
SCALE: 1:8

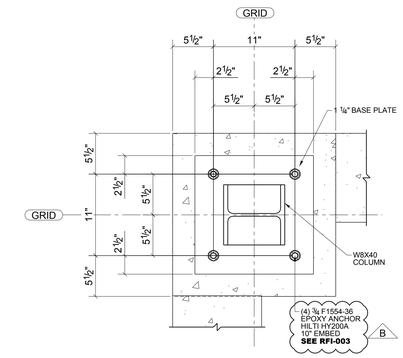

4 DETAIL
SCALE: 1:8

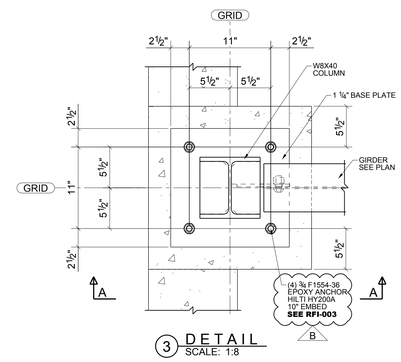

3 DETAIL
SCALE: 1:8

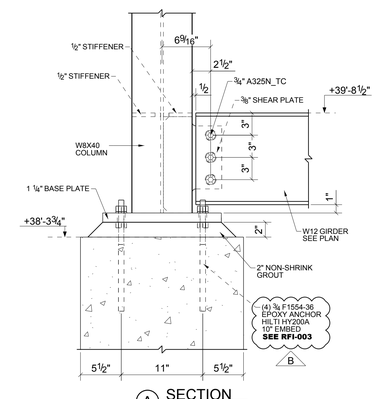

A SECTION
SCALE: 1:8

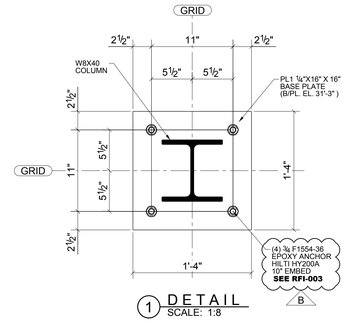

1 DETAIL
SCALE: 1:8

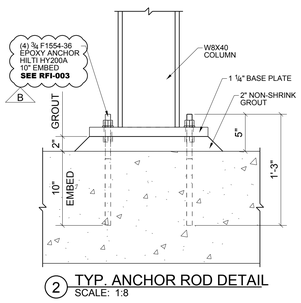

2 TYP. ANCHOR ROD DETAIL
SCALE: 1:8

GENERAL NOTES:

BRP ##	1. INDICATES BEARING PLATE ASSEMBLY NUMBER
[T.O. BRP. EL. X'-XX"]	2. INDICATES TOP OF BEARING PLATE ELEVATION
[B/PL. EL. X'-XX"]	3. INDICATES BOTTOM OF BASE PLATE ELEVATION
[X'-X"]	4. INDICATES TOP OF STEEL ELEVATION

APPROVER, PLEASE NOTE:

CONFIRM OR CORRECT ALL DIMENSIONS OR V.I.F. STATEMENTS. IF RETURN WITHOUT CORRECTIONS, THE INFORMATION OR SUGGESTIONS SHOWN WILL BE TAKEN AS CORRECT.

SUBMITTAL NOTE:

FINAL APPROVAL OF THIS SHEET IS REQUIRED PRIOR TO RELEASE OF SHOP DRAWINGS FOR FABRICATION.

Tekla Structures